0261 headlamps

TECHNICAL DATA / FEATURES

dimensions:	246x136x159
light function:	passing, driving, parking
lamp function markings:	HC/R, A
traffic:	right-hand
reference mark:	12,5
source of light:	H4, T4W
maximum power:	75W, 4W
nominal voltage:	12V-24V DC
optics:	standard
IP rating:	IP54
housing's material:	metal, plastic
lens' material:	glass
built-in connectors:	-
other (optional):	levelling system

ADDITIONAL INFORMATION

To be mounted in factory designed locations or in the front bumper recesses.

Useful parts while installing:
- main bulb gasket - cat. No. A.05820
- electric levelling unit ϕ6 long - cat. No. A.09050
- parking light bulb holder - cat. No. A.05921
- mounting snaps ϕ6 - cat. No. A.06030

Dedicated application:
A - Lublin I (from 1993)
B - Lublin II (from 1997), Lublin III (from 1999)
C - Autosan, Jelcz, Star, Star-Man
D - Jelcz, Autosan

DIMENSIONS

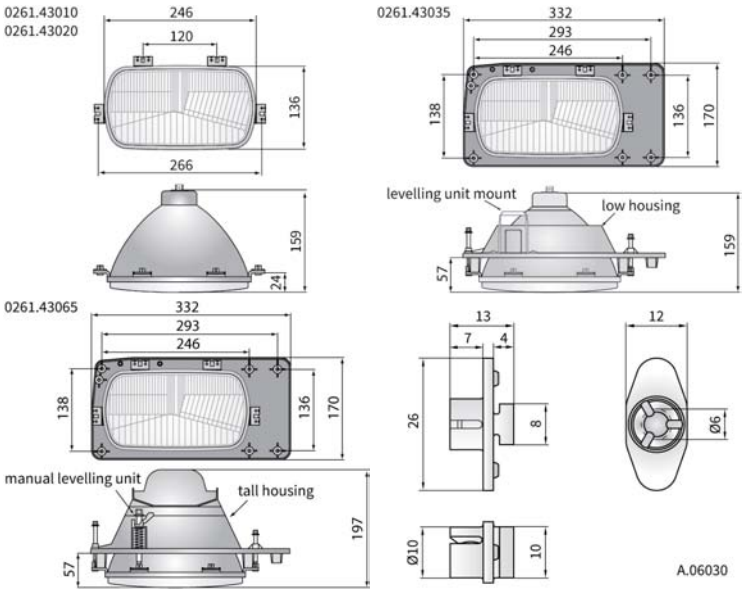

Cat. number	Homologation code	Light function	passing	driving	parking	Type	H4	Accessories	bulb H4 24V	bulb H4 12V	bulb T4W	short housing	tall housing	bulb gasket	manual levelling unit	fixing for leveling unit	Side	right	left	right / left	Application	dedicated	Packaging / pc	carton box
0261.43020	261		✓	✓			✓							✓						✓		A/B		1
0261.43010	261		✓	✓	✓		✓							✓						✓		C/D		1
0261.43061	261		✓	✓			✓			✓		✓		✓	✓			✓				A		1
0261.43062	261		✓	✓			✓			✓		✓		✓	✓				✓			A		1
0261.43035	261		✓	✓			✓			✓		✓		✓		✓		✓				B		1
0261.43036	261		✓	✓			✓			✓		✓		✓		✓			✓			B		1
0261.43069	261		✓	✓	✓		✓		✓		✓		✓	✓		✓		✓				C		1
0261.43060	261		✓	✓	✓		✓		✓		✓		✓	✓		✓			✓			C		1
0261.43065	261		✓	✓	✓		✓		✓		✓		✓	✓	✓			✓				D		1
0261.43066	261		✓	✓	✓		✓		✓		✓		✓	✓	✓				✓			D		1